Module: General electronics

Tutorial Worksheet No. 0:

Duration: 1 weeks

Exercises to do in class: 1,2,5

Assignment to submit: 3,4

Exercise 01:

Given:

E = 10V; R = 1kΩ; $R_1 = R_3 = R_5 = 2k\Omega$; $R_2 = R_4 = 3k\Omega$;

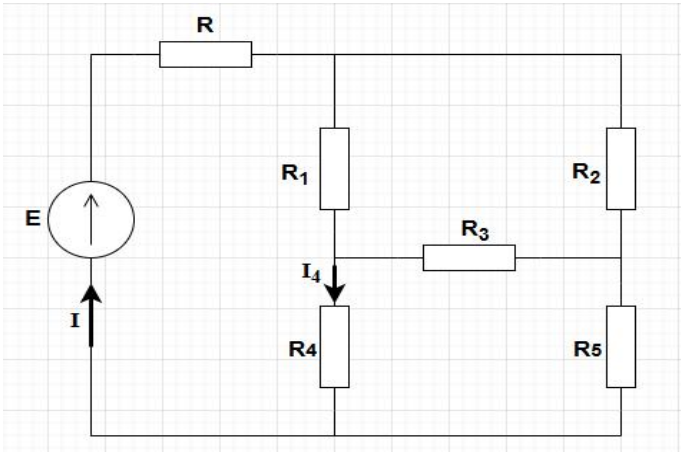

1. Using Kennelly's theorem, calculate the current I_4
2. Deduce the current I
3. the dissipated Joule power P.

Exercise 02:

Consider the circuit shown in Figure 1, composed of 3 voltage sources and 7 resistors. We want to determine the current I using the independent mesh current method.

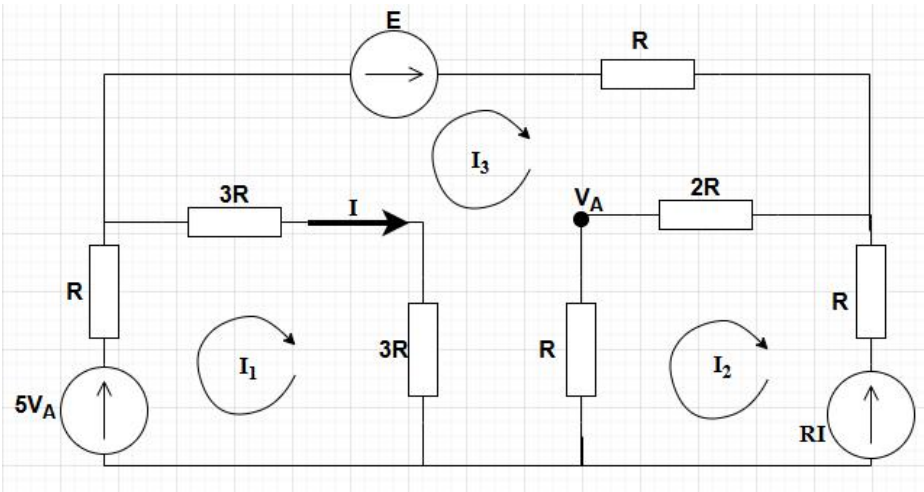

1. Following the mesh current directions indicated in Figure 1, establish the system of equations in terms of E and R (in matrix form).
2. Calculate the <u>numerical values</u> of I_1, I_2, and I_3 given that: R = 1 kΩ, E = 5 V.
3. Express I as a function of I_1, I_2, and I_3, then calculate its numerical value.

Exercise 03:

Consider the circuit shown below, composed of 07 resistors, 02 independent sources, and 02 controlled (dependent) source. We want to determine the value of current I using the nodal voltage method.

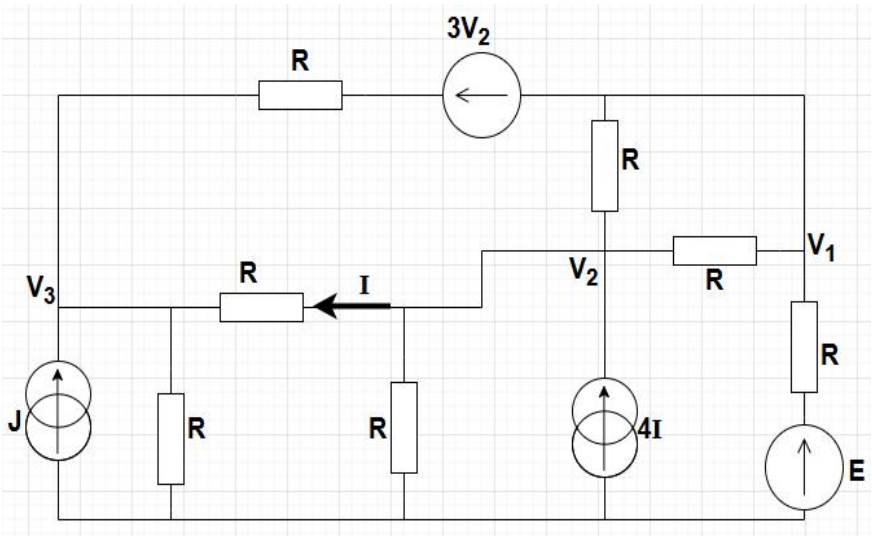

1. Identify the type of controlled sources used in the circuit.
2. Establish the system of equations for the unknowns V_1, V_2 and V_3 in terms of E, J and R (in matrix form).
3. Determine the numerical values of V_1, V_2, and V_3 given that: E = 5 V, R = 1 kΩ, J=5mA,
4. Express I as a function of V1, V2, V3 and R, then calculate its numerical value.

Exercise 04:

We want to find the value of current I in the circuit shown below. To do this, we will use the superposition method. The circuit will be divided into two elementary circuits: circuit C_1 and circuit C_2. The current I_1 represents the contribution of I in circuit C_1, and the current I_2 represents the contribution of I in circuit C_2.

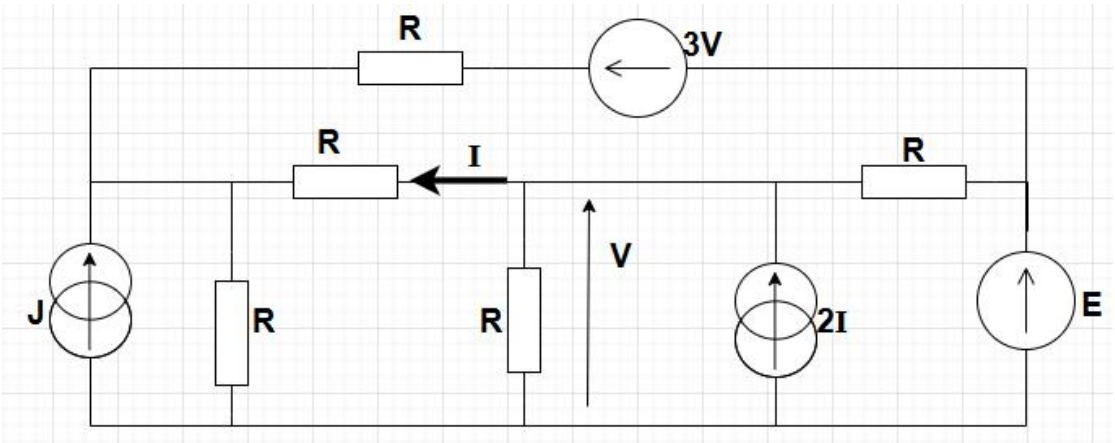

1. Determine circuits C1 and C2 by showing currents I1 and I2.
2. Express I1 and I2 as a function of E, J and R,
3. Determine the value of I using the superposition principle.

Exercise 05:

Consider the circuit shown in Figure 4 below. We want to determine the current I flowing through the load resistor R_L using Thevenin's theorem.

Given values: E = 5 V, R = 1 kΩ, R_L = 2 kΩ

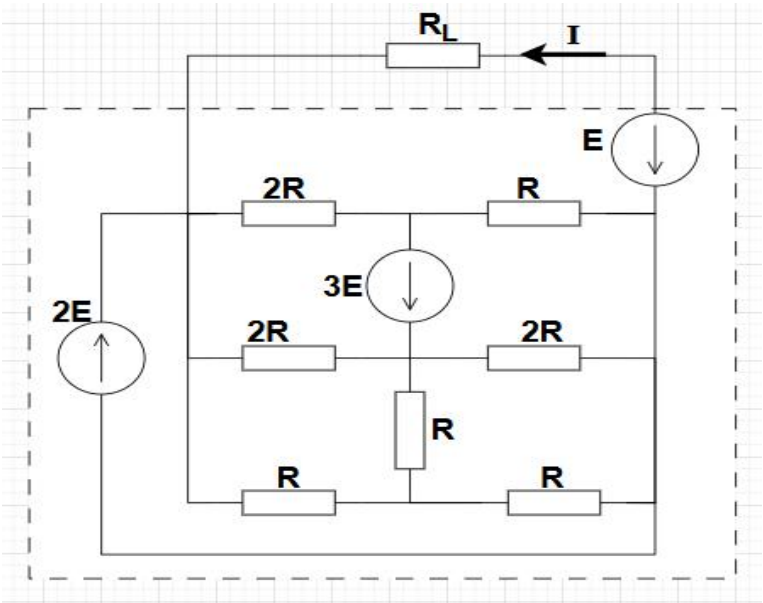

1. Determine the expression and numerical value of the Thevenin equivalent voltage E_{th}.
2. Determine the expression and numerical value of the Thevenin equivalent resistance R_{th}.
3. Deduce the expression and numerical value of current I flowing through R_L.